SERVICE BRAKES

CONTENTS

BASIC BRAKE SYSTEM 35A

ANTI-SKID BRAKING SYSTEM (ABS) <4WD> 35B

BASIC BRAKE SYSTEM

CONTENTS

GENERAL INFORMATION 3

SERVICE SPECIFICATIONS 5

LUBRICANTS 6

SEALANT 6

SPECIAL TOOLS 6

ON-VEHICLE SERVICE 7

- Brake Pedal Check and Adjustment 7
- Brake Booster Operating Test 8
- Check Valve Operation Check 9
- Proportioning Valve Function Test <Vehicles for Hong Kong> 9
- Load Sensing Spring Length Check and Adjustment <Vehicles except for Hong Kong> 10
- Load Sensing Proportioning Valve Function Test <Vehicles except for Hong Kong> 10
- Bleeding 11
- Brake Fluid Level Sensor Check 12
- Front Disc Brake Pad Check and Replacement 12
- Disc Brake Rotor Check 13
- Brake Disc Thickness Check 14
- Brake Disc Run-out Check and Correction 14
- Brake Lining Thickness Check 15
- Brake Drum Inside Diameter Check 15
- Brake Lining and Brake Drum Contact Check .. 15

BRAKE PEDAL 16

MASTER CYLINDER AND BRAKE BOOSTER 17

- Master Cylinder 20

FRONT DISC BRAKE 21

REAR DRUM BRAKE 26

- Wheel Cylinder 28

PROPORTIONING VALVE <VEHICLES FOR HONG KONG> 29

LOAD SENSING PROPORTIONING VALVE <VEHICLES EXCEPT FOR HONG KONG> 30

GENERAL INFORMATION

The brake system offers high dependability and durability along with improved braking performance and brake sensitivity.

Items		Specifications
Master cylinder	Type	Tandem type
	I.D. mm	22.2
Brake booster	Type	Vacuum type, single
	Effective dia. of power cylinder mm	230
	Boosting ratio	4.5
Proportioning valve	Type	Dual type
	Decompression ratio	0.25
Front disc brakes	Type	Floating caliper, 1-piston, ventilated disc
	Disc effective dia. × thickness mm	236 × 22
	Wheel cylinder I.D. mm	57.2
	Pad thickness mm	10.0
	Clearance adjustment	Automatic
Rear drum brakes	Type	Leading trailing
	Drum I.D. mm	228
	Wheel cylinder I.D. mm	22.2
	Lining thickness mm	4.9
	Clearance adjustment	Automatic
Brake fluid		DOT3 or DOT4

CONSTRUCTION DIAGRAM

<Vehicles for Hong Kong>

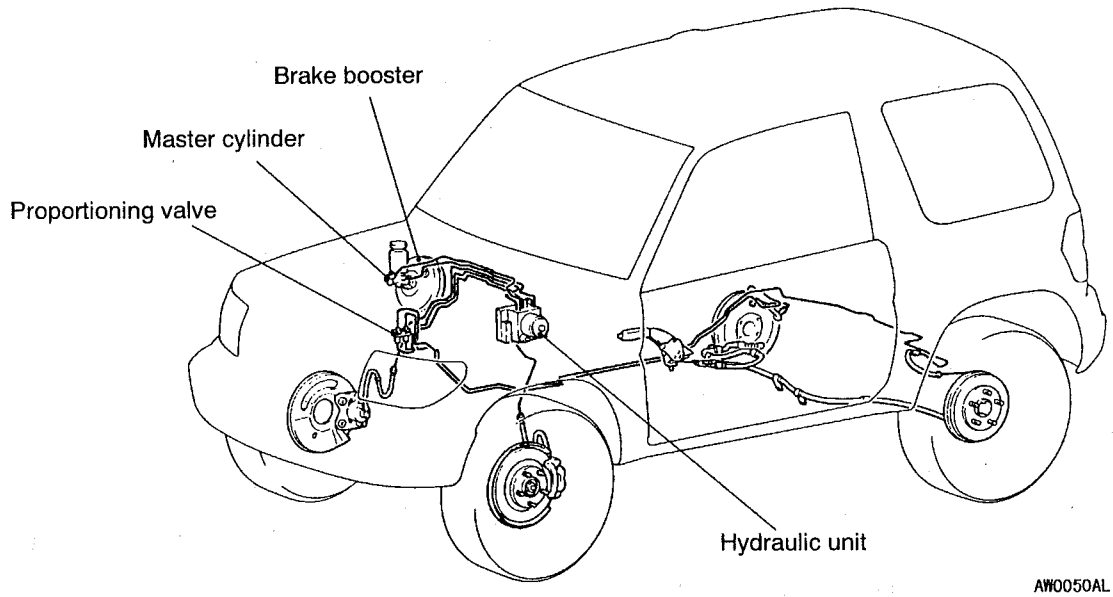

<Vehicles except for Hong Kong>

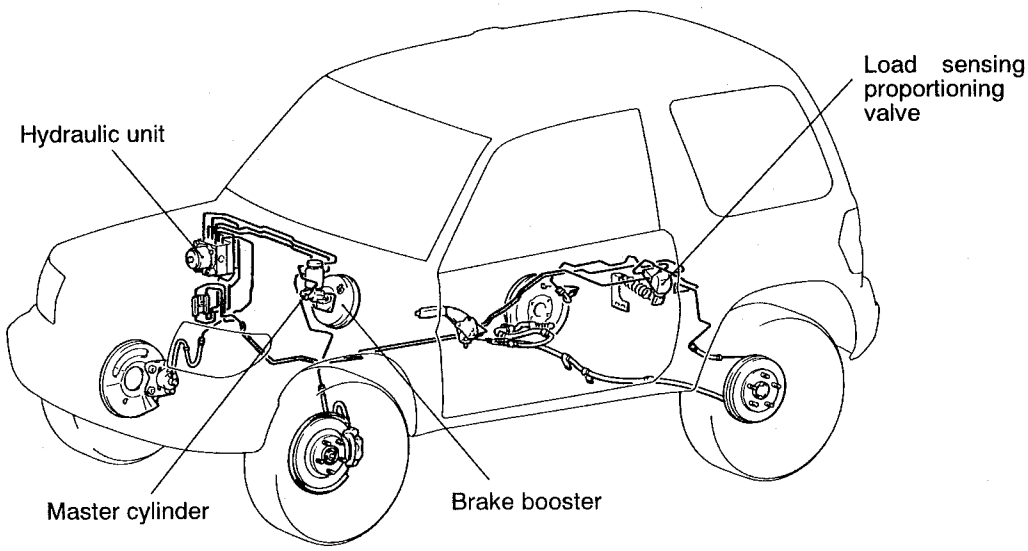

SERVICE SPECIFICATIONS

Items			Standard value	Limit
Brake pedal height mm	L.H. drive vehicles		201 – 204	–
	R.H. drive vehicles		201.7 – 204.7	–
Brake pedal play mm			3 – 8	–
Brake pedal to floorboard clearance when the brake pedal is depressed mm			105 or more	–
Brake booster push rod protrusion amount mm			23.93 – 24.18	–
Proportioning valve	Split point MPa		1.81 – 2.21	–
	Output fluid pressure (Input fluid pressure) MPa	3-door models	2.70 – 3.19 (5.88)	–
		5-door models	3.29 – 3.78 (5.88)	–
	Output fluid pressure difference between left and right MPa		–	0.39
Load sensing proportioning valve output fluid pressure (Input fluid pressure) MPa	When load sensing spring length is 196 mm (when unladen)	3-door models	3.6 – 4.6 (9.8)	–
		5-door models	4.0 – 5.1 (9.8)	–
	When load sensing spring length is 214 mm (when laden)	3-door models	6.5 – 8.0 (9.8)	–
		5-door models	7.4 –9.0 (19.8)	–
		3-door models	7.1 – 8.9 (13.7)	–
		5-door models	8.1 – 9.9 (13.7)	–
	Output fluid pressure difference between left and right MPa		–	0.39
Load sensing spring length <Distance between spring ends> mm			194 – 198	–
Front disc brake	Pad thickness mm		10.0	2.0
	Disc thickness mm		22.0	20.4
	Disc runout mm		–	0.06
	Drag force N		69	–
Rear drum brake	Lining thickness mm		4.9	1.0
	Drum inside diameter mm		228.6	230.6
Front hub end play mm			–	0.2

LUBRICANTS

Items	Specified Lubricant	Quantity
Brake fluid	DOT3 or DOT4	As required
Piston boot, piston seal	Repair kit grease	
Guide pin, lock pin		
Pin boot		
Piston, wheel cylinder body	DOT3 or DOT4	
Backing plate	Brake grease SAE J310, NLGI No.1	
Shoe and lining assembly		
Automatic adjuster assembly		

SEALANT

Items	Specified sealant	Remarks
Fitting	3M ATD Part No. 8663 or equivalent	Semi-drying sealant

SPECIAL TOOLS

Tool	Number	Name	Use
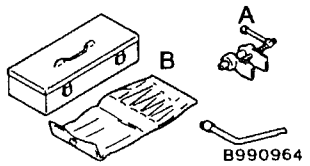	MB990964 A: MB990520 B: MB990619	Brake tool set	• Pushing-in of the disc brake piston • Installation of drum brake wheel cylinder piston cup
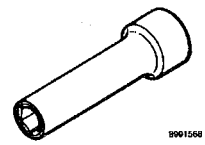	MB991568	Push rod adjusting socket	Adjustment of the brake booster push rod protrusion amount

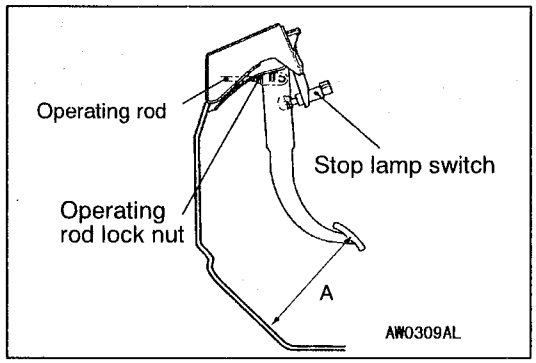

ON-VEHICLE SERVICE

BRAKE PEDAL CHECK AND ADJUSTMENT

BRAKE PEDAL HEIGHT

1. Turn up the carpet, etc. under the brake pedal.
2. Measure the brake pedal height as illustrated.

   Standard value (A):
   <L.H. drive vehicles> 201 – 204 mm
   <R.H. drive vehicles> 201.7 – 204.7 mm
3. If the brake pedal height is not within the standard value, follow the procedure below.
   (1) Disconnect the stop lamp switch connector.
   (2) Loosen the stop lamp switch by turning it approx. 1/4 turns anticlockwise.
   (3) Remove the pin, and then adjust so that the brake pedal height meets the standard value by turning the clevis.

   NOTE
   When the clevis is turned 180°, the pedal height is changed approximately 2.3 mm.

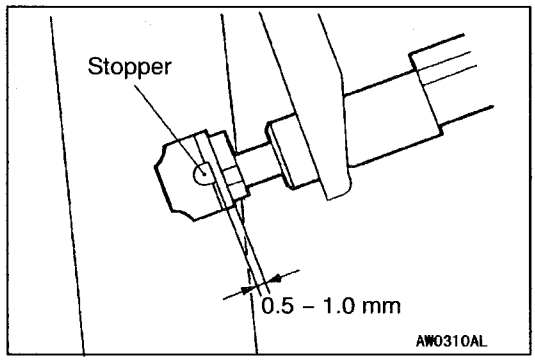

   (4) Screw in the stop lamp switch until it touches the stopper. At this time, support the brake pedal to the highest position by hand.
   (5) Lock the stop lamp switch by turning it approx. 1/4 turns clockwise, and confirm that the clearance between the switch plunger and the stopper is as shown.
   (6) Connect the connector at the stop lamp switch.

   Caution
   Check that the stop lamp does not illuminate when the brake pedal is not depressed.
4. For A/T for Hong Kong, check the key interlock and shift lock mechanisms. (Refer to GROUP 23 – On-vehicle Service.)
5. Return the carpet, etc.

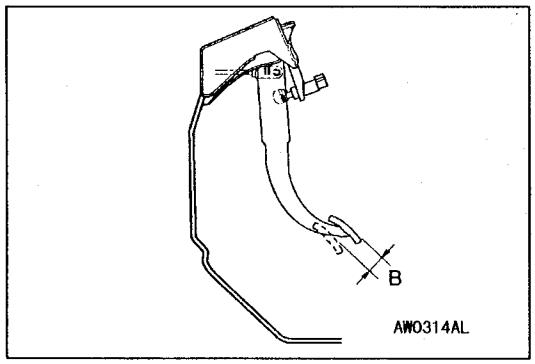

BRAKE PEDAL FREE PLAY

1. With the engine stopped, depress the brake pedal two or three times. After eliminating the vacuum in the power brake booster, press the pedal down by hand, and confirm that the amount of movement before resistance is met (the free play) is within the standard value range.

   Standard value (B): 3 – 8 mm

2. If the brake pedal play is not within the standard value, check the following, and adjust or replace if necessary:
   - Excessive play between the brake pedal and the clevis pin, or between the clevis pin and the brake booster operating rod
   - Brake pedal height
   - Installation position of the stop lamp switch, etc.

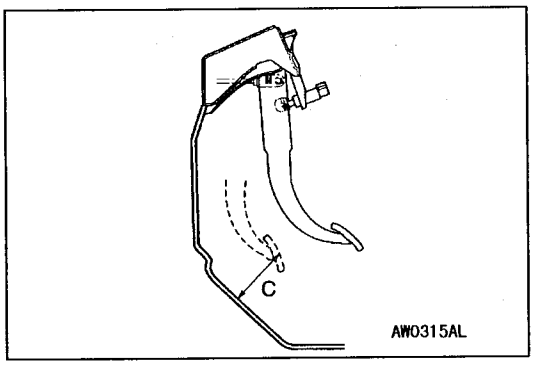

CLEARANCE BETWEEN BRAKE PEDAL AND FLOOR BOARD

1. Turn up the carpet etc. under the brake pedal.
2. Start the engine, depress the brake pedal with approximately 490 N of force, and measure the clearance between the brake pedal and the floorboard.

   Standard value (C): 105 mm or more
3. If the clearance is outside the standard value, check for air trapped in the brake line, thickness of the disc brake pad or the drum brake lining and dragging in the parking brake.
   Adjust and replace defective parts as required.
4. Return the carpet, etc.

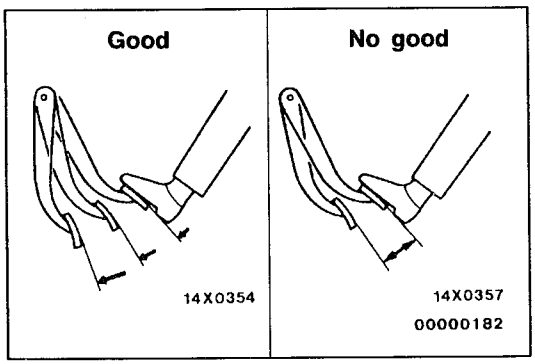

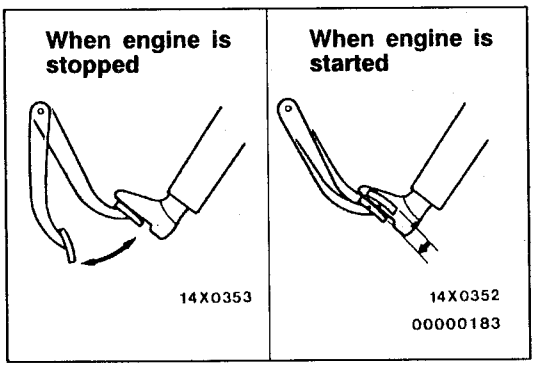

BRAKE BOOSTER OPERATING TEST

For simple checking of the brake booster operation, carry out the following tests:

1. Run the engine for one or two minutes, and then stop it.
   If the pedal depresses fully the first time but gradually becomes higher when depressed succeeding times, the booster is operating properly. If the pedal height remains unchanged, the booster is defective.
2. With the engine stopped, step on the brake pedal several times.
   Then start the engine while the brake pedal is stepped on.
   If the pedal moves downward slightly, the booster is in good condition. If there is no change, the booster is defective.

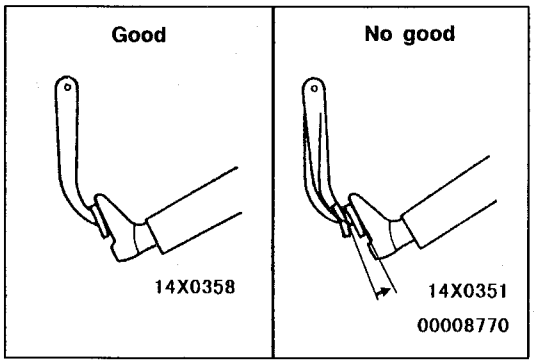

3. With the engine running, step on the brake pedal and then stop the engine.
   Hold the pedal depressed for 30 seconds. If the pedal height does not change, the booster is in good condition.
   If the pedal rises, the booster is defective.

If the above three tests are okay, the booster performance can be determined as good.
If one of the above three tests is not okay at least, the check valve, vacuum hose, or booster will be defective.

CHECK VALVE OPERATION CHECK

1. Remove the vacuum hose. (Refer to P.35A-17.)

   Caution
   The check valve should not be disassembled from the vacuum hose as they are united as one part.

2. Check the operation of the check valve by using a vacuum pump.

Vacuum pump connection	Accept/reject criteria
Connection at the brake booster side (A)	A negative pressure (vacuum) is created and held.
Connection at the intake manifold side (B)	A negative pressure (vacuum) is not created.

Caution
If the check valve is defective, always replace it as an assembly unit together with the vacuum hose.

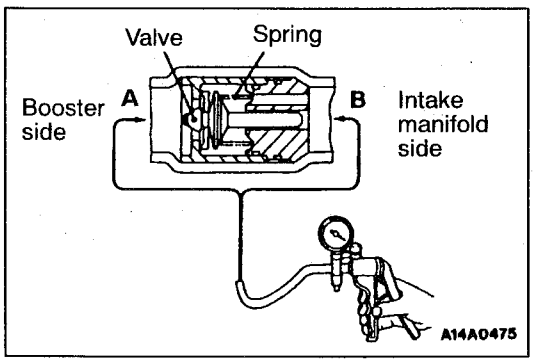

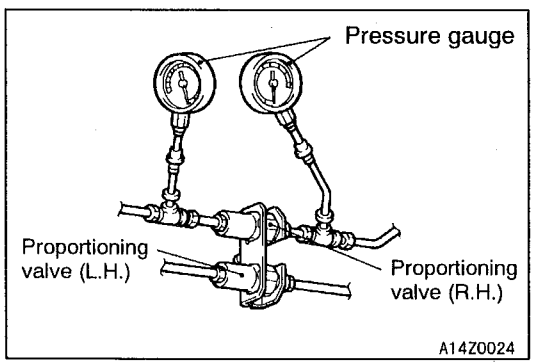

PROPORTIONING VALVE FUNCTION TEST <VEHICLES FOR HONG KONG>

1. Connect two pressure gauges at the input and output side of the proportioning valve as shown.

   Caution
   The proportioning valves are installed independently for the right and left brake lines. Always measure each valve.

2. Bleed the brake line and the pressure gauges.

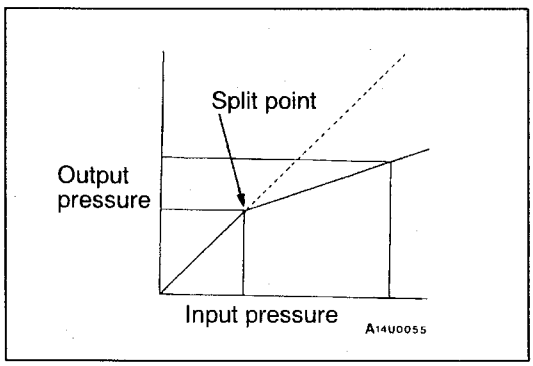

3. Depress the brake pedal gradually. Then check that the split point, where the output fluid pressure begins to drop in proportion to the output fluid pressure, is at the standard value.

   Standard value: 1.81 – 2.21 MPa

4. Depress the brake pedal more strongly than at the above step. Then check that the output fluid pressure is at the standard value when the input fluid pressure is 5.88 MPa.

   Standard value:
   <3-door models> 2.70 – 3.19 MPa
   <5-door models> 3.29 – 3.78 MPa

5. Measure each output fluid pressure at both valves, and check that the difference between the two is at the limit value or less.

   Limit: 0.39 MPa

6. If the measured pressure exceeds the limit, replace the proportioning valve.

LOAD SENSING SPRING LENGTH CHECK AND ADJUSTMENT <VEHICLES EXCEPT FOR HONG KONG>

1. Park the vehicle on a level ground. The vehicle should be unloaded and supported only by wheels.

   Caution
   Never support the vehicle with jacks or other similar means.

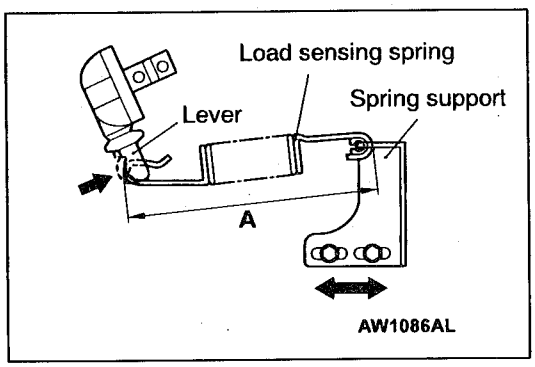

2. With the lever pressed all the way to the load sensing proportioning valve side, check whether or not the length (shown in the figure) of the spring (the length between its ends) is the standard value.

   Standard value (A): 194 – 198 mm

3. If the spring length is not within the standard value, loosen the bolt attaching the support and adjust the distance by moving the support.

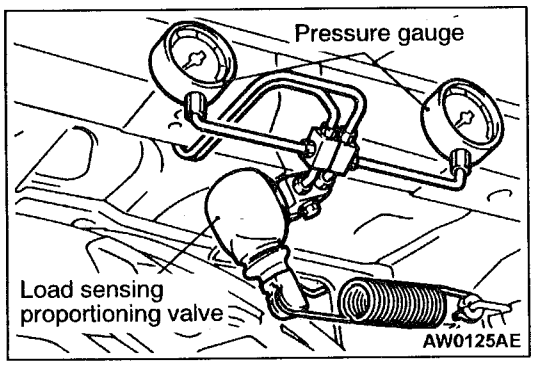

LOAD SENSING PROPORTIONING VALVE FUNCTION TEST <VEHICLES EXCEPT FOR HONG KONG>

1. Connect pressure gauges to the input and output ports of the load sensing proportioning valve.
2. Bleed the system. (Refer to P.35A-11.)
3. Disconnect the spring at the support side.

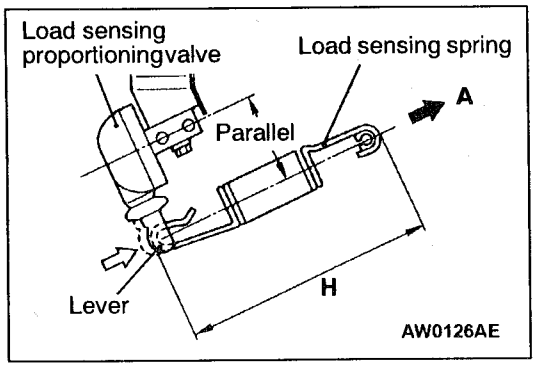

4. Place the spring so that it is in parallel with the load sensing proportioning valve, and then pull in the direction indicated by arrow A so that its length H shown in the figure (the length between its ends) is as noted below.

   NOTE
   At this time the lever is pressed all the way to the load sensing proportioning valve side.

5. Check at this time whether or not the output fluid's pressure, relative to the load sensing proportioning valve's input fluid pressure, is within the standard value.

Standard value:

Spring length H mm	Input fluid pressure MPa	Output fluid pressure MPa	
		3-door models	5-door models
196*1	9.8	3.6 – 4.6	4.0 – 5.1
214*2	9.8	6.5 – 8.0	7.4 – 9.0
	13.7	7.1 – 8.9	8.1 – 9.9

NOTE
*1 and *2 indicate the applicable lengths for unladen and laden vehicles respectively.

6. Measure each output fluid pressure at both valves, and check that the difference between the two is at the limit value or less.

Limit: 0.39 MPa

7. After making the check, install the spring. Disconnect the pressure gauges from the load sensing proportioning valve and bleed air.

BLEEDING

Caution

Specified brake fluid: DOT3 or DOT4
Always use the specified brake fluid. Avoid using a mixture of the specified brake fluid and other fluid.

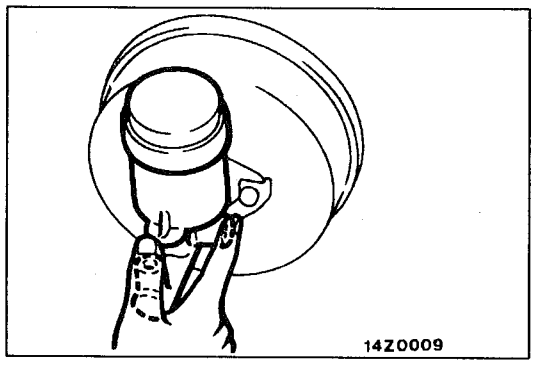

MASTER CYLINDER BLEEDING

The master cylinder used has no check valve, so if bleeding is carried out by the following procedure, bleeding of air from the brake pipeline will become easier. (When brake fluid is not contained in the master cylinder.)

1. Fill the reserve tank with brake fluid.
2. Keep the brake pedal depressed.
3. Have another person cover the master cylinder outlet with a finger.
4. With the outlet still closed, release the brake pedal.
5. Repeat steps 2–4 three or four times to fill the inside of the master cylinder with brake fluid.

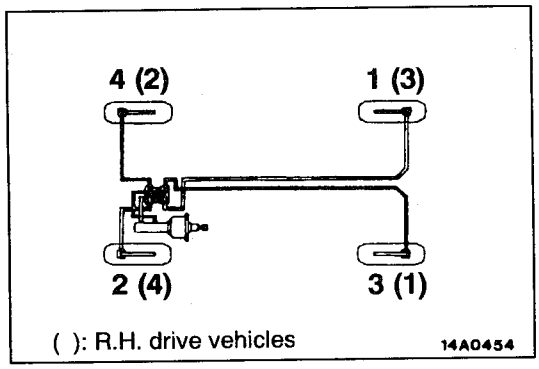

BRAKE PIPE LINE BLEEDING

Bleed the air in the sequence shown in the figure.

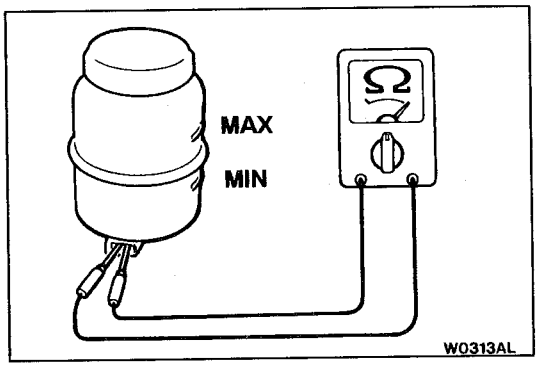

BRAKE FLUID LEVEL SENSOR CHECK

The brake fluid level sensor is in good condition if there is no continuity when the float surface is above "MIN" and if there is continuity when the float surface is below "MIN".

FRONT DISC BRAKE PAD CHECK AND REPLACEMENT

NOTE
The brake pads have wear indicators that contact the brake disc when the brake pad thickness reaches approximately 2 mm and emit a squealing sound to warn the driver.

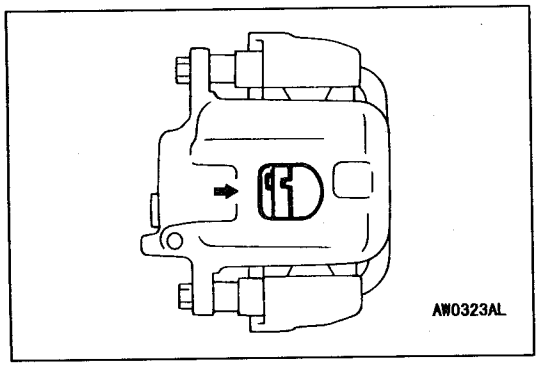

1. Check the brake pad thickness through the caliper body check port.

   Standard value: 10.0 mm

   Limit: 2.0 mm
2. When the thickness is less than the limit, always replace the pads at an axle set.

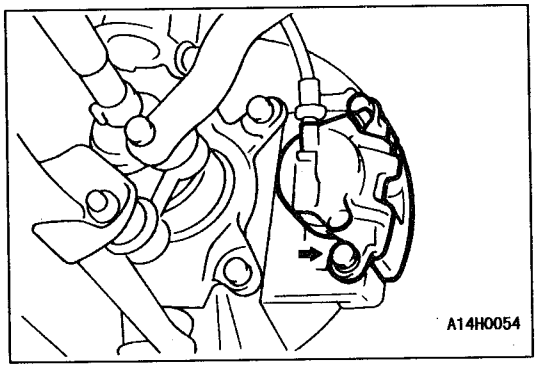

3. Remove the guide lock pin bolt. Pivot the caliper assembly and hold it with wires.

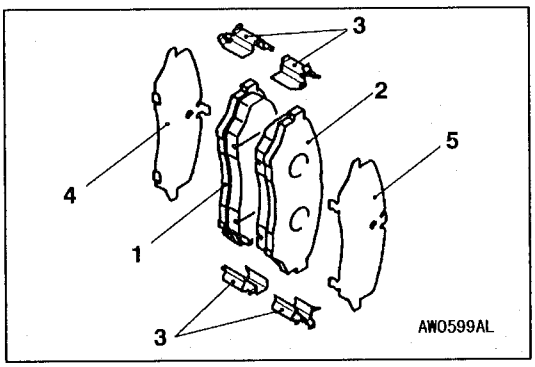

4. Remove the following parts from the caliper support.
   1. Pad and wear indicator assembly
   2. Pad assembly
   3. Clip
   4. Inner shim
   5. Outer shim

5. In order to measure the brake drag force after pad installation, measure the rotary-sliding resistance of the hub with the pads removed. (Refer to P.35A-21.)
6. Install the pads and caliper assembly, and then check the brake drag force. (Refer to P.35A-22.)

DISC BRAKE ROTOR CHECK

Caution

When servicing disc brakes, it is necessary to exercise caution to keep the disc brakes within the allowable service values in order to maintain normal brake operation.

Before re-finishing or re-processing the brake disc surface, the following conditions should be checked.

Inspection items	Remarks
Scratches, rust, saturated lining materials and wear	• If the vehicle is not driven for a certain period, the sections of the discs that are not in contact with lining will become rusty, causing noise and shuddering. • If grooves resulting from excessive disc wear and scratches are not removed prior to installing a new pad assembly, there will momentarily be inappropriate contact between the disc and the lining (pad).
Run-out or drift	Excessive run-out or drift of the discs will increase the pedal depression resistance due to piston knock-back.
Change in thickness (parallelism)	If the thickness of the disc changes, this will cause pedal pulsation, shuddering and surging.
Inset or warping (flatness)	Overheating and improper handling while servicing will cause inset or warping.

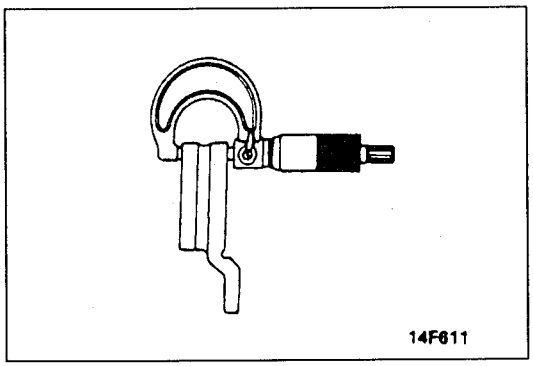

BRAKE DISC THICKNESS CHECK

1. Using a micrometer, measure disc thickness at eight positions, approximately 45° apart and 10 mm in from the outer edge of the disc.

   Brake disc thickness

   Standard value: 22.0 mm

   Limit: 20.4 mm

   Thickness variation (at least 8 positions)
   The difference between any thickness measurements should not be more than 0.015 mm.
2. If the disc is beyond the limits for thickness, remove it and install a new one. If thickness variation exceeds the specification, replace the brake disc or grind it with on-the-car type brake lathe ("MAD, DL-8700PF" or equivalent).

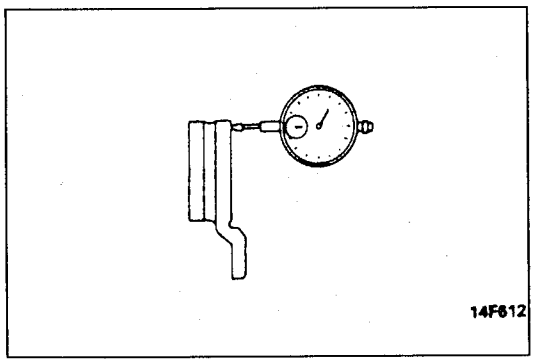

BRAKE DISC RUN-OUT CHECK AND CORRECTION

1. Remove the brake assembly, and then hold it with wire.
2. Place a dial gauge approximately 5 mm from the outer circumference of the brake disc, and measure the run-out of the disc.

   Limit: 0.06 mm or less
3. If the brake disc run-out exceeds the limit, correct it as follows:

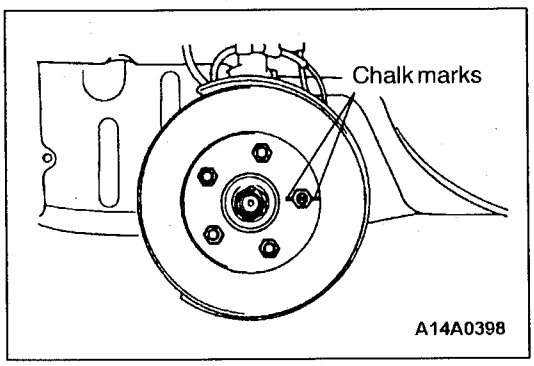

(1) Chalk phase marks on the wheel stud and the brake disc, which run-out is excessive as shown.

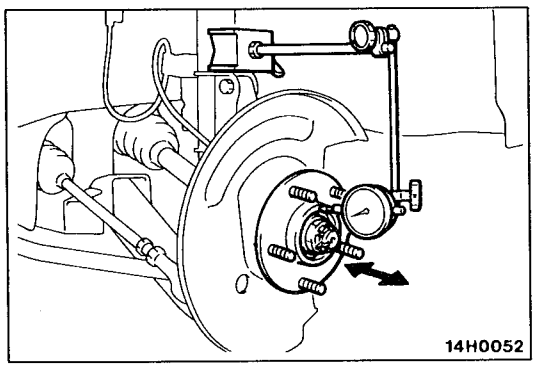

(2) Remove the brake disc. Then place a dial gauge as shown, and measure the end play by pushing and pulling the wheel hub.

Limit: 0.2 mm

(3) If the end play exceeds the limit, disassemble the hub and knuckle assembly to check each part.

(4) If the end play does not exceed the limit, dephase the brake disc and secure it. Then recheck the brake disc run-out.

4. If the run-out cannot be corrected by changing the phase of the brake disc, replace the brake disc or grind it with the on-the-car type brake lathe ("MAD, DL-8700PF" or equivalent).

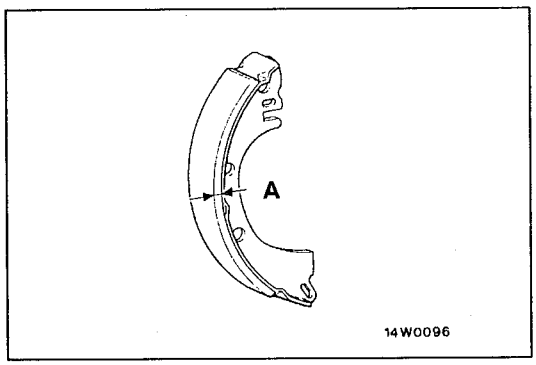

BRAKE LINING THICKNESS CHECK

1. Remove the brake drum.
2. Measure the thickness of the brake lining at the place worn the most.

   Standard value (A): 4.9 mm

   Limit (A): 1.0 mm
3. Replace the shoe and lining assembly as an axle set if brake lining thickness is less than the limit. For information concerning the procedures for installation of the shoe and lining assembly, refer to P.35A-26.

   Caution

   If there is a significant difference in the thickness of the shoe and lining assemblies on the left and right sides, check the sliding condition of the piston.

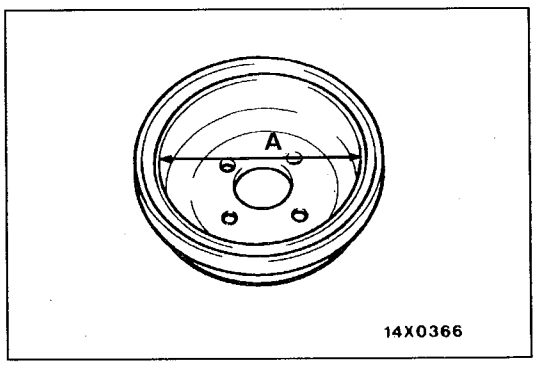

BRAKE DRUM INSIDE DIAMETER CHECK

1. Remove the brake drum.
2. Measure the inside diameter of the brake drum at two or more locations.

   Standard value (A) : 228.6 mm

   Limit (A) : 230.6 mm
3. Replace the brake drum when the inside diameter exceeds the limit value or the brake drum is worn unevenly.

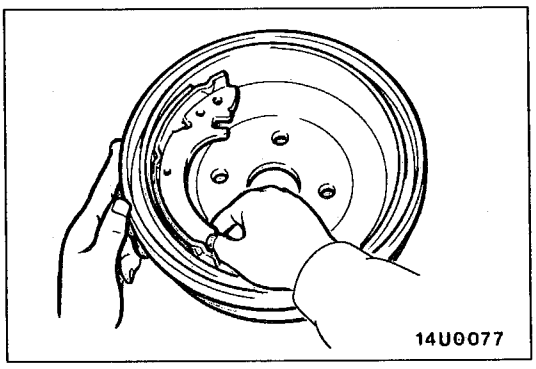

BRAKE LINING AND BRAKE DRUM CONTACT CHECK

1. Remove the shoe and lining assembly. (Refer to P.35A-26.)
2. Chalk inner surface of brake drum and rub with shoe and lining assembly.
3. Replace shoe and lining assembly or brake drums if there are any irregular contact area.
4. Clean off chalk after check.

BRAKE PEDAL

REMOVAL AND INSTALLATION

Post-installation Operation
Brake Pedal Adjustment
(Refer to P.35A-7.)

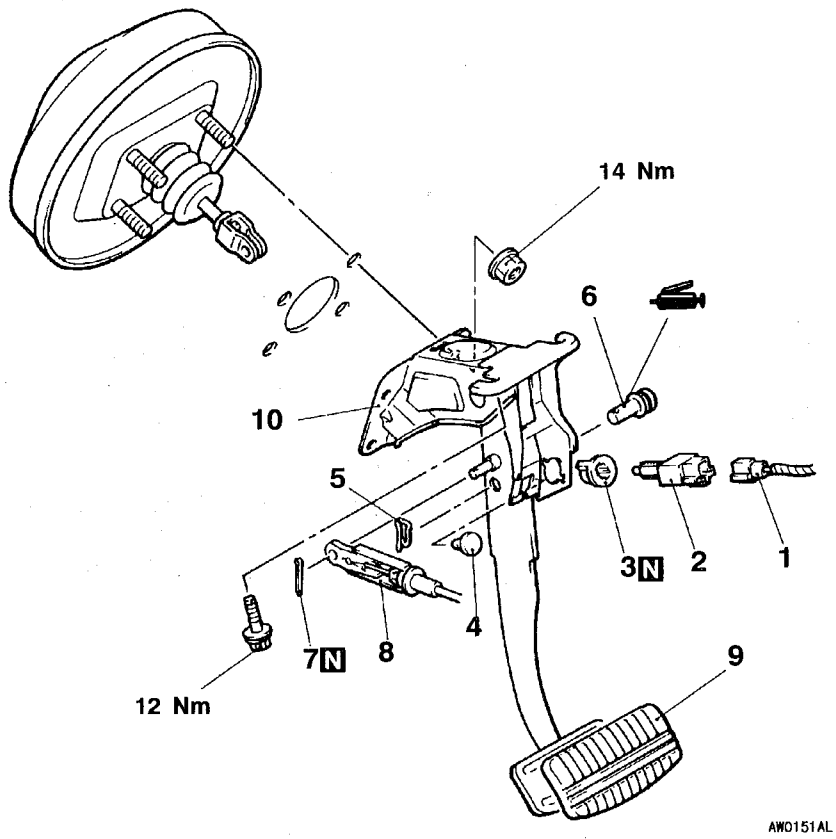

Removal steps

1. Harness connector
2. Stop lamp switch
3. Adjuster
4. Pedal stopper
5. Snap pin
6. Pin assembly
7. Split pin <A/T for Hong Kong>
8. Shift lock cable connection <A/T for Hong Kong>
9. Pedal pad
10. Brake pedal and pedal support member

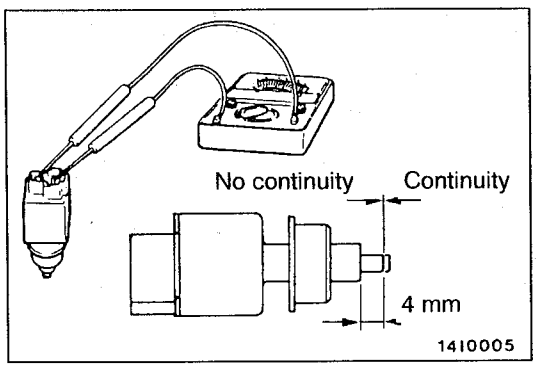

INSPECTION

STOP LAMP SWITCH CHECK

1. Connect an ohmmeter between the stop lamp switch connector terminals.
2. There should be no continuity between the terminals when the plunger is pushed in as shown. There should be continuity when it is released.

MASTER CYLINDER AND BRAKE BOOSTER

REMOVAL AND INSTALLATION

Pre-removal Operation
Brake Fluid Draining

Post-installation Operation
- Brake Fluid Supplying and Air Bleeding (Refer to P.35A-11.)
- Brake Pedal Adjustment (Refer to P.35A-7.)

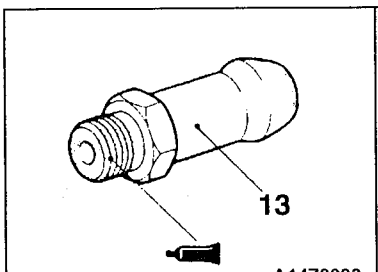

Specified Sealant: 3M ATD Part No.8663 or equivalent

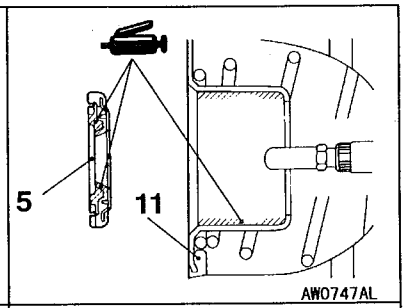

Grease: Silicone grease

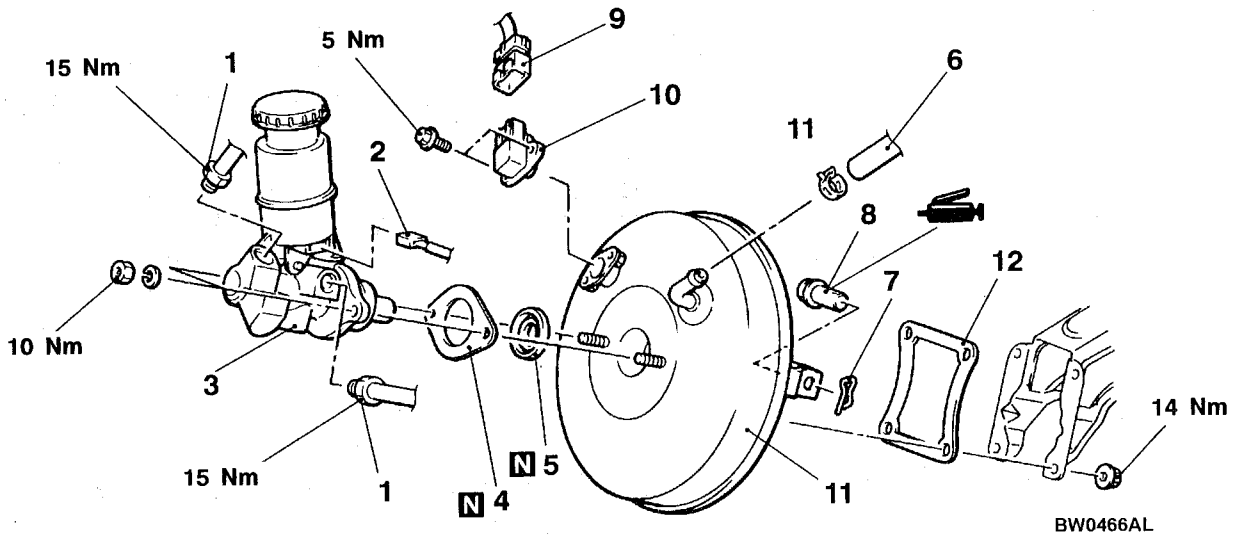

<L.H. drive vehicles>

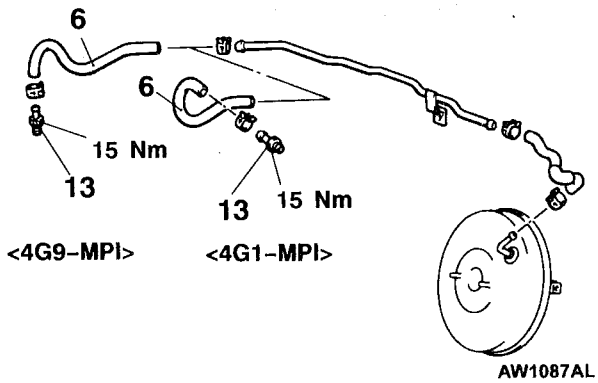

<R.H. drive vehicles>

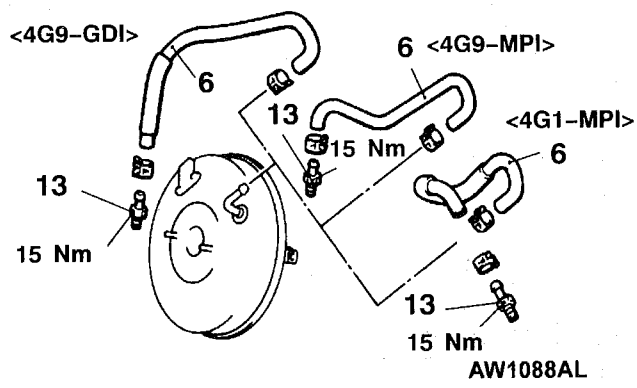

Master cylinder removal steps

1. Brake pipe connection
2. Brake fluid level sensor connector
3. Master cylinder
4. Gasket
- ▶C◀ 5. Seal

Brake booster removal steps

1. Brake pipe connection
2. Brake fluid level sensor connector
3. Master cylinder
4. Gasket
- ▶C◀ 5. Seal
- ▶B◀ • Push rod protrusion amount check and adjustment
- ▶A◀ 6. Vacuum hose (With built-in check valve)
7. Snap pin
8. Pin assembly
9. Vacuum sensor connector <GDI>
10. Vacuum sensor <GDI>
11. Brake booster
12. Sealer

Fitting removal

13. Fitting

INSTALLATION SERVICE POINTS

▶A◀ VACUUM HOSE CONNECTION

<GDI>

Insert the vacuum hose to the fitting with its paint mark facing upward until the hose end reaches the edge of the hexagonal part of the fitting, and then secure the hose by using the hose clip.

<MPI>

1. Insert the vacuum hose to the brake booster with its paint mark (at the brake booster side) facing upward, and then secure it with the hose clip.
2. Insert the vacuum hose to the fitting until the hose end reaches the edge of the hexagonal part of the fitting, and then secure it with the hose clip.

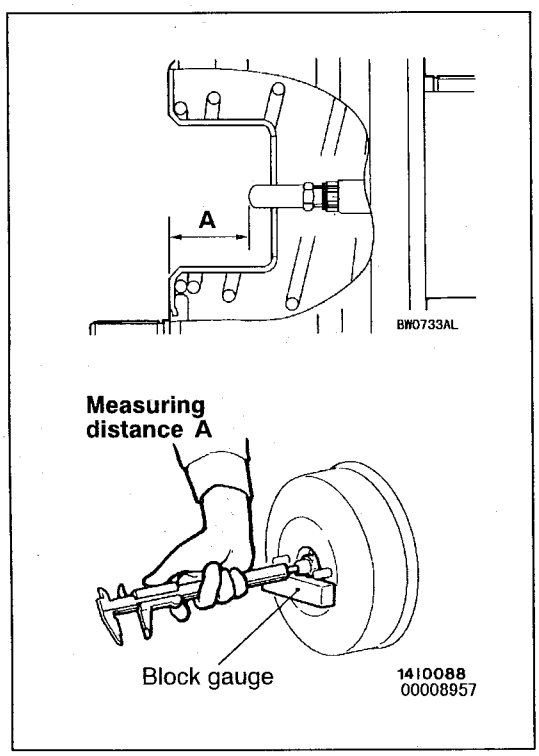

▶B◀ PUSH ROD PROTRUSION AMOUNT CHECK AND ADJUSTMENT

1. Measure dimension (A).

   Standard value (A) : 23.93 – 24.18 mm

   NOTE
   When a negative pressure of 66.7 kPa is applied to the brake booster, the push rod should protrude 23.48 – 23.73 mm.

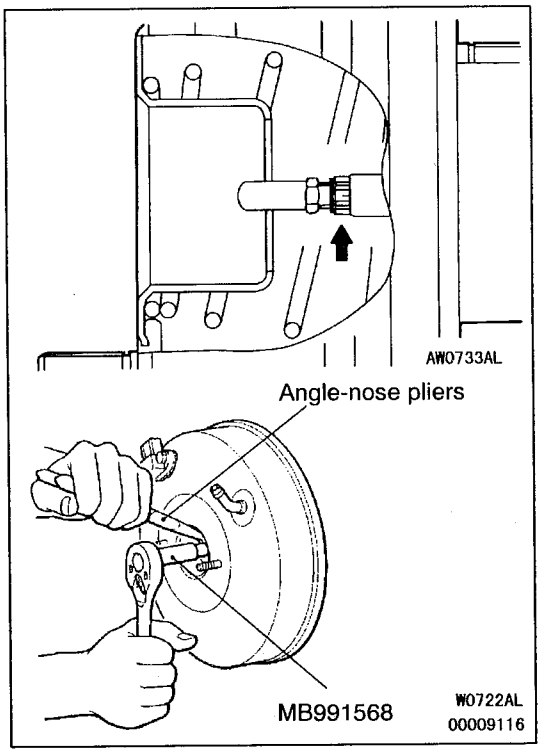

2. If the protrusion amount is not within the standard value range, adjust the push rod length by turning the push rod. Use the special tool to turn the push rod while holding the rod spline with angle-nose pliers.

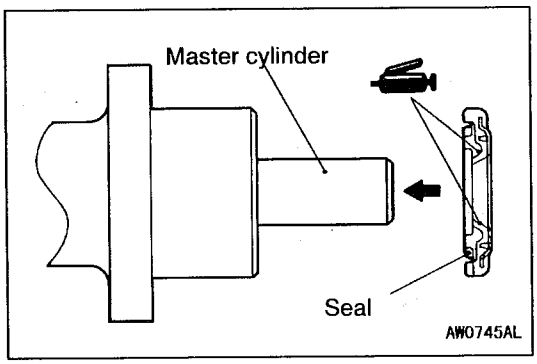

▶C◀ SEAL INSTALLATION

1. Apply silicone grease to the seal.
2. Install the seal to the master cylinder as shown.

INSPECTION

VACUUM SENSOR CHECK <GDI>

Refer to GROUP 13A – Troubleshooting.

NOTE
The vacuum sensor is monitored by the engine-ECU. Diagnosis code is output when the vacuum sensor has a malfunction.

MASTER CYLINDER
DISASSEMBLY AND REASSEMBLY

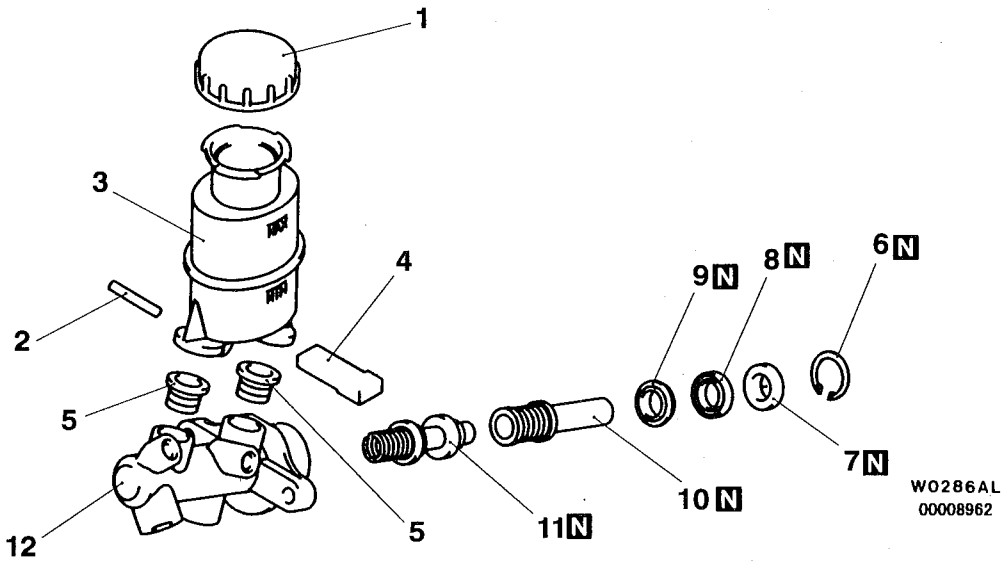

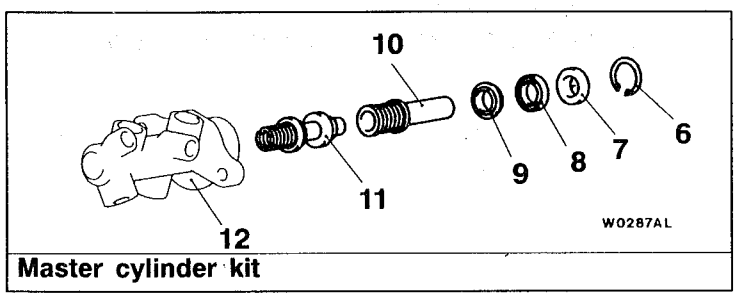

Master cylinder kit

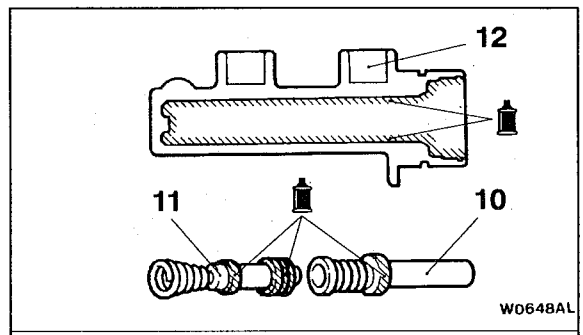

Brake fluid: DOT3 or DOT4

Disassembly steps

1. Reservoir cap
2. Pin
3. Reservoir tank
4. Brake fluid level sensor
5. Reservoir seal
- ◀A▶ 6. Stopper ring
7. Piston guide
8. Cylinder cup
9. Plate
10. Primary piston assembly
11. Secondary piston assembly
12. Master cylinder body

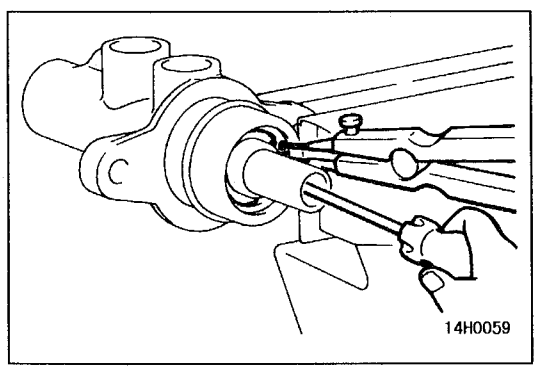

DISASSEMBLY SERVICE POINT

◀A▶ STOPPER RING REMOVAL

Push the primary piston assembly and remove the stopper ring.

FRONT DISC BRAKE

REMOVAL AND INSTALLATION

Pre-removal Operation
Brake Fluid Draining

Post-installation Operation
Brake Fluid Supplying and Air Bleeding
(Refer to P.35A-11.)

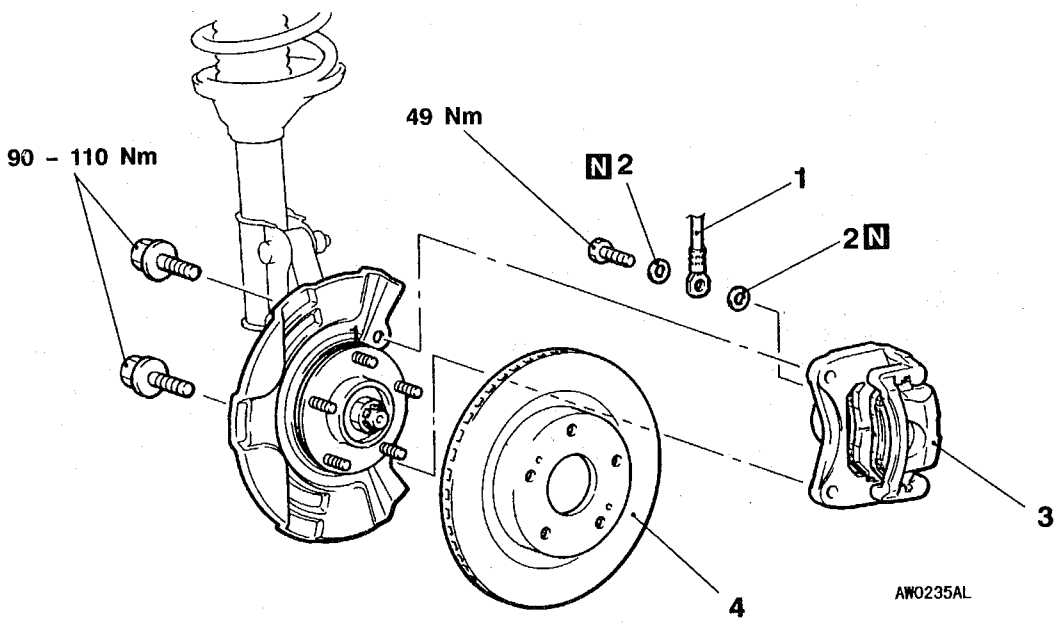

Removal steps
1. Brake hose connection
2. Gasket
▶A◀ 3. Disc brake assembly
4. Brake disc

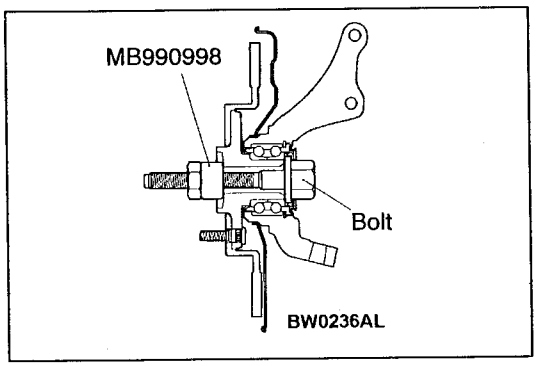

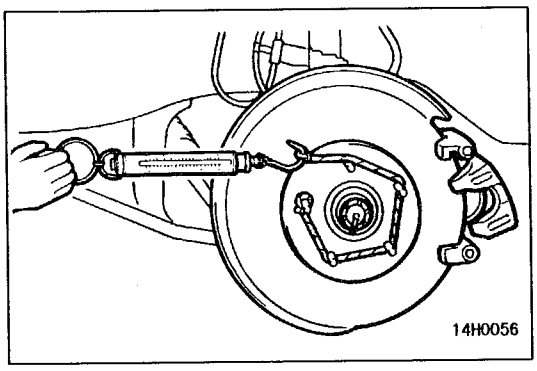

INSTALLATION SERVICE POINT

▶A◀ DISC BRAKE ASSEMBLY INSTALLATION

1. In order to measure the brake drag force after pad installation, measure the rotary-sliding resistance of the hub by the following procedure with the pads removed.
   (1) Withdraw the drive shaft. (Refer to GROUP 26 – Front Axle.)
   (2) Attach the special tool to the front hub assembly as shown in the illustration, and tighten it to the specified torque.

   Tightening torque: 196 – 255 Nm
   (3) Use a spring balance to measure the rotary-sliding resistance of the hub in the forward direction.
2. Install the caliper support to the knuckle, and then assemble the pad clip and the pad to the caliper support.

Caution
Do not contaminate the friction surfaces of the pads and brake discs by any oil or grease.

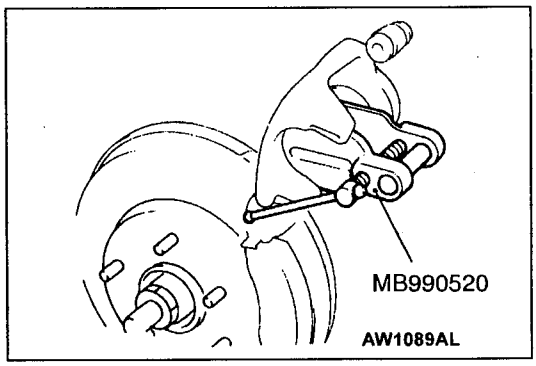

3. Clean the piston and insert it into the cylinder with the special tool.
4. Be careful that the piston boot does not become caught, when lowering the caliper assembly and install the guide pin to the caliper.
5. Start the engine, and then depress the brake pedal two or three times strongly. Then stop the engine.
6. Turn the brake disc forward 10 times.

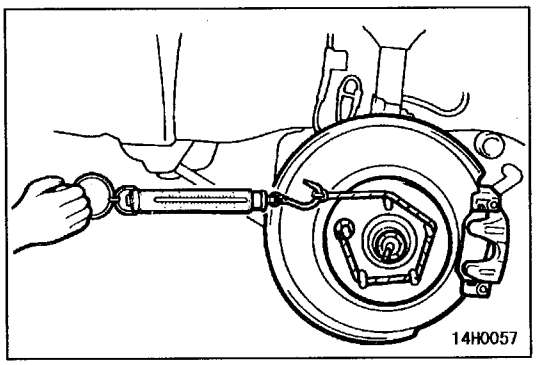

7. Use a spring balance to measure the rotary-sliding resistance of the hub.
8. Calculate the drag force of the disc brake [difference between the values measured at steps 1 and 7].

   Standard value: 69 N

9. If that drag force exceeds the standard value, disassemble the piston assembly. Then check the piston for contamination or rust, and confirm if the piston or the piston seal is deteriorated, and if the lock pin and the guide pin slide smoothly.

DISASSEMBLY AND REASSEMBLY

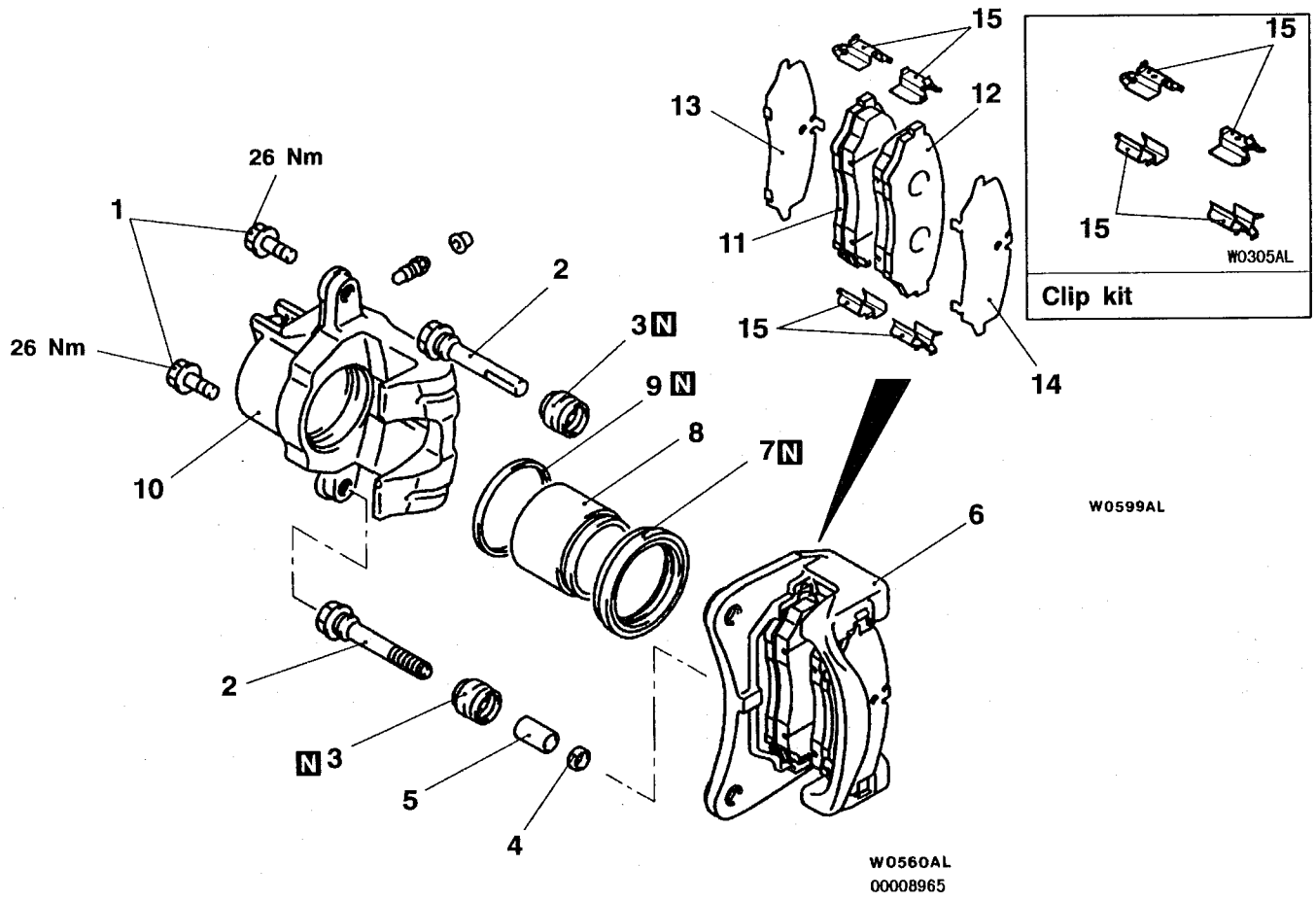

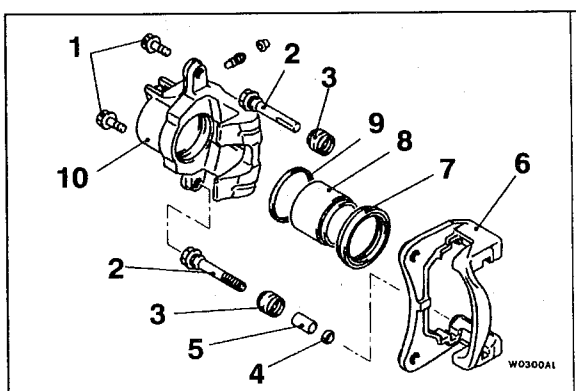

Brake caliper kit

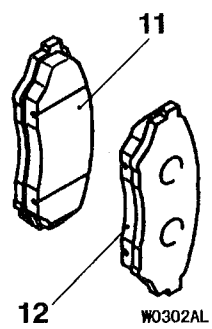

Pad set

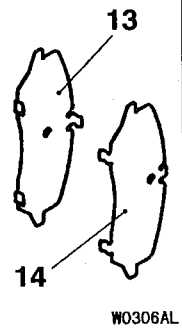

Shim kit

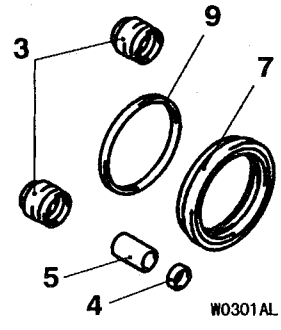

Seal and boot kit

Disassembly steps

1. Guide pin lock bolt
2. Guide pin
3. Boot
4. Bushing
5. Bushing retainer
6. Caliper support (including pad, clip, and shim)

◀A▶ 7. Piston boot

◀A▶ ◀B▶ 8. Piston
9. Piston seal
10. Caliper body
11. Pad and wear indicator assembly
12. Pad assembly
13. Inner shim
14. Outer shim
15. Clip

LUBRICATION POINTS

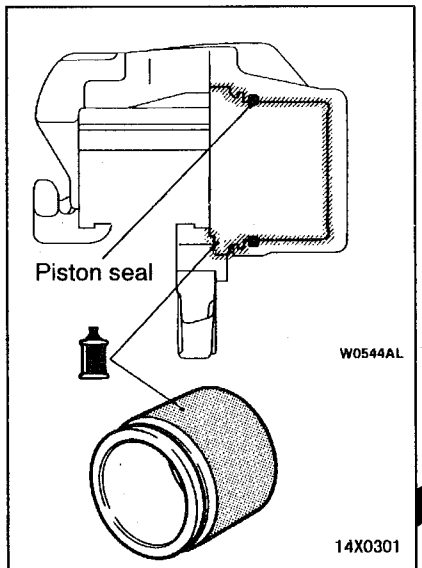

Caution
The piston seal inside the seal and boot kit is coated with special grease, so do not wipe this grease off.

Brake fluid: DOT3 or DOT4

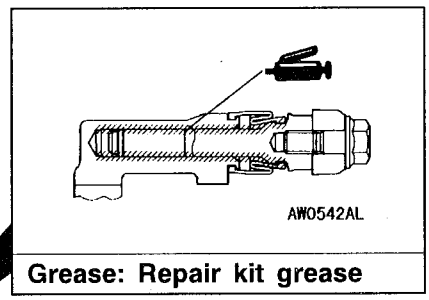

Grease: Repair kit grease

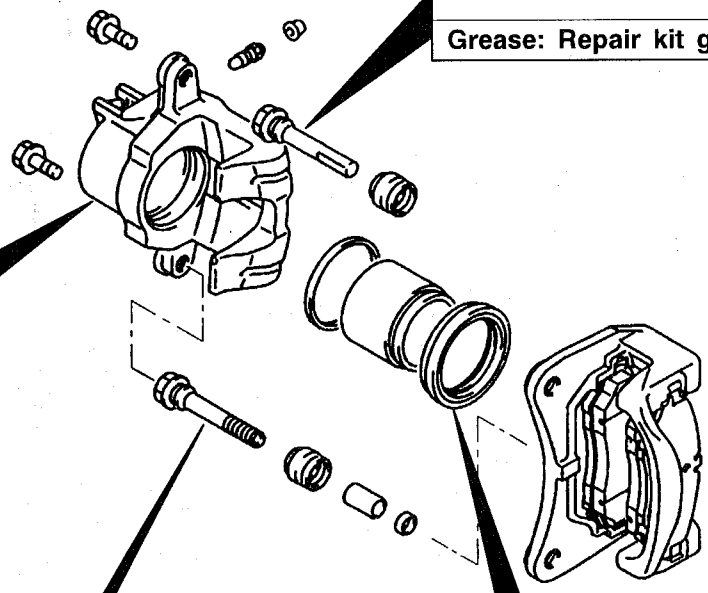

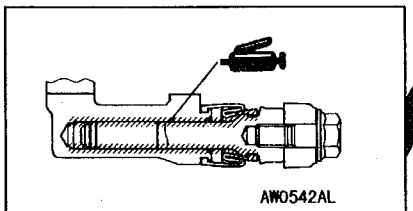

Grease: Repair kit grease

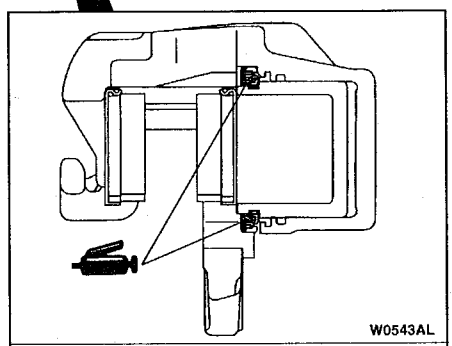

Grease: Repair kit grease

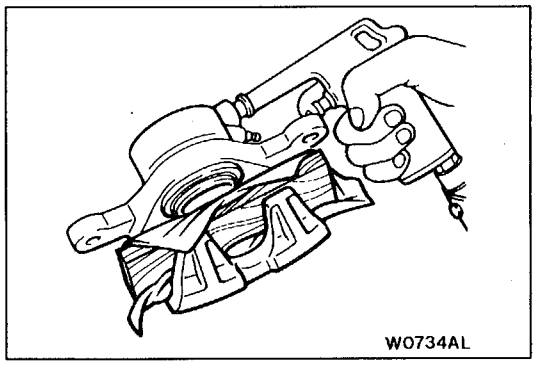
W0734AL

DISASSEMBLY SERVICE POINTS

◀A▶ PISTON BOOT/PISTON REMOVAL

Use a piece of wood to protect the caliper body outer side, and then apply compressed air through the brake hose connection hole to withdraw the piston and piston boot.

Caution
If air is blown into the caliper body suddenly, the piston will pop out, causing damage to the caliper body. Be sure to apply compressed air gradually.

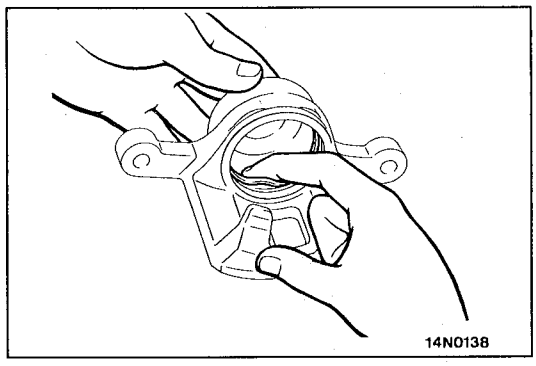
14N0138

◀B▶ PISTON SEAL REMOVAL

1. Remove the piston seal with finger tip.

   Caution
   Do not use a flat-tipped screwdriver or other tool to prevent damage to inner cylinder.

2. Clean piston surface and inner bore with trichloroethylene, alcohol or the specified brake fluid.

   Specified brake fluid: DOT3 or DOT4

INSPECTION

- Check the cylinder for wear, damage or rust.
- Check the piston surface for wear, damage or rust.
- Check the caliper body or sleeve for wear.
- Check pad for damage or adhesion of grease, check the backing metal for damage.

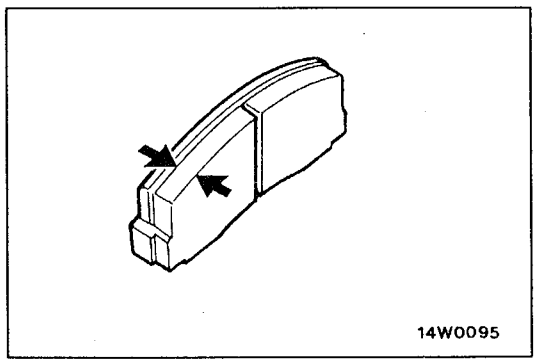
14W0095

PAD WEAR CHECK

Measure thickness at the thinnest and worn area of the pad. Replace the pad assembly if the pad thickness is less than the limit value.

Standard value: 10 mm

Limit: 2.0 mm

Caution
1. **Always replace the brake pads as an axle set.**
2. **If an excessive difference is found in the thickness between the right and left brake pads, check moving parts.**

REAR DRUM BRAKE

REMOVAL AND INSTALLATION

Pre-removal Operation
- Loosening the Parking Brake Cable Adjusting Nut. (Refer to GROUP 36 – On-vehicle Service)
- Brake Fluid Draining

Post-installation Operation
- Parking Brake Lever Stroke Adjustment (Refer to GROUP 36 – On-vehicle Service)
- Brake Fluid Supplying and Air Bleeding (Refer to P.35A-11.)

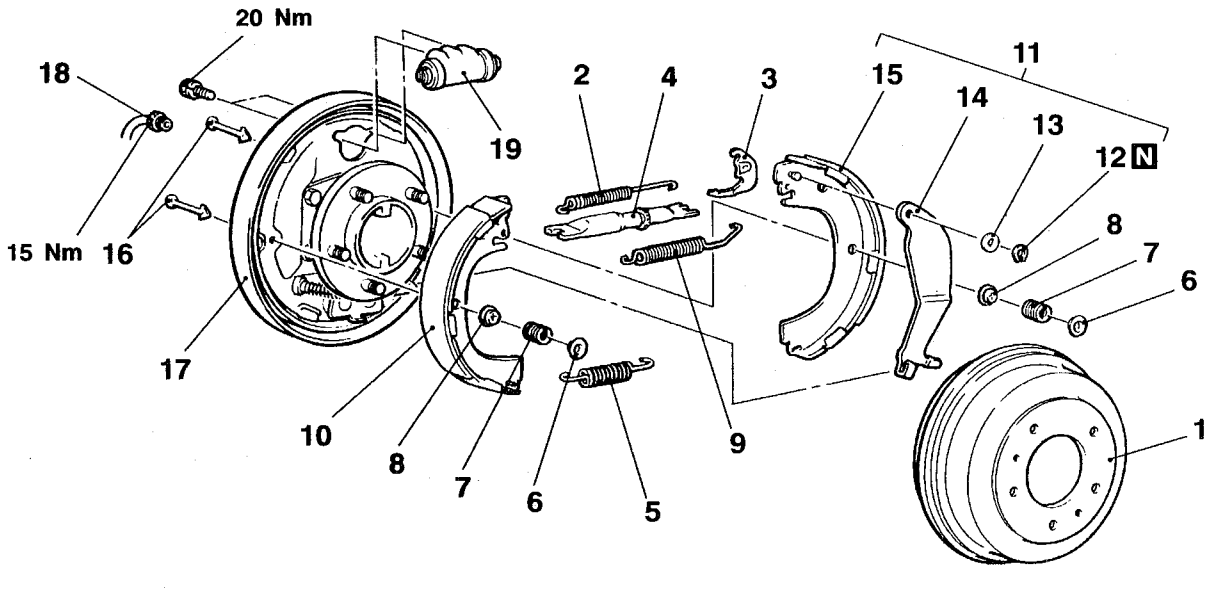

14W0094
00008976

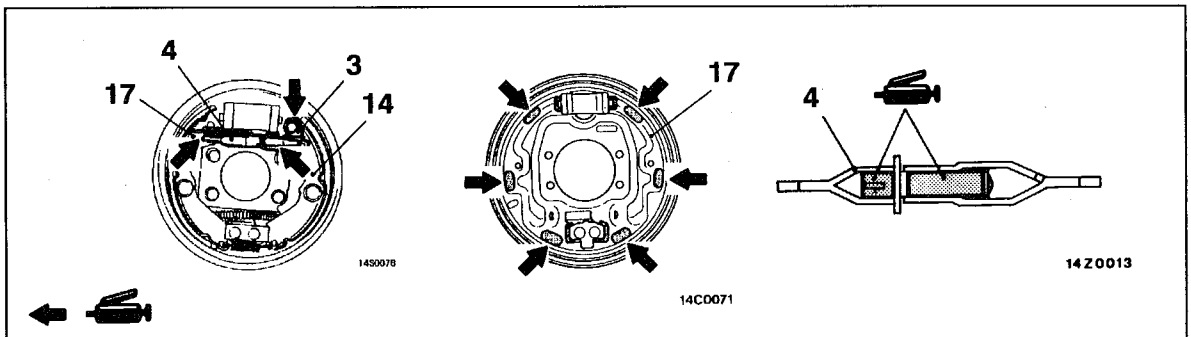

Specified grease: Brake grease SAE J310, NLGI No.1

Removal steps
1. Brake drum
2. Shoe-to-shoe spring
3. Adjuster lever
4. Auto-adjuster assembly
5. Retainer spring
6. Shoe hold-down cup
7. Shoe hold-down spring
8. Shoe hold-down cup
9. Shoe-to-shoe spring
10. Shoe and lining assembly
11. Shoe and lever assembly

◀A▶ ▶B◀ 12. Retainer
▶A◀ 13. Wave washer
14. Parking lever
15. Shoe and lining assembly
16. Shoe hold-down pin
17. Backing plate (Refer to GROUP 27 – Rear Axle Shaft.)

Wheel cylinder removal steps
1. Brake drum
18. Brake pipe connection
19. Wheel cylinder assembly

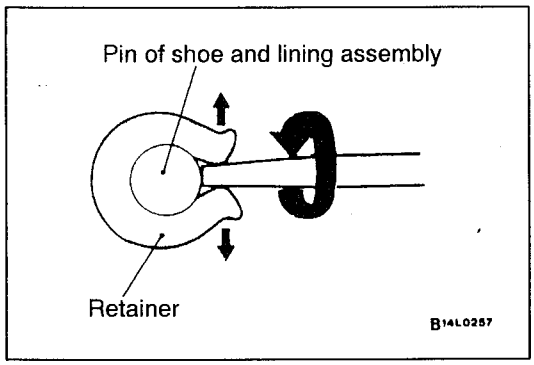

REMOVAL SERVICE POINT

◀A▶ RETAINER REMOVAL

Use a flat-tipped screwdriver or the like to open up the retainer joint, and remove the retainer.

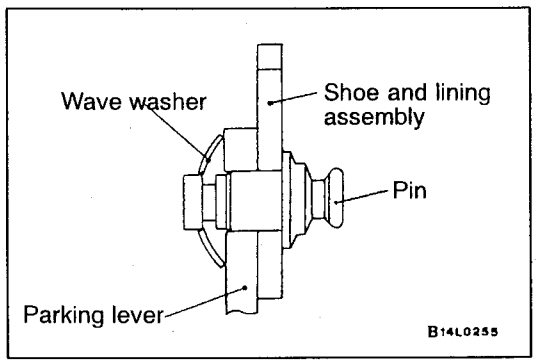

INSTALLATION SERVICE POINTS

▶A◀ WAVE WASHER INSTALLATION

Install the wave washer in the direction shown in the illustration.

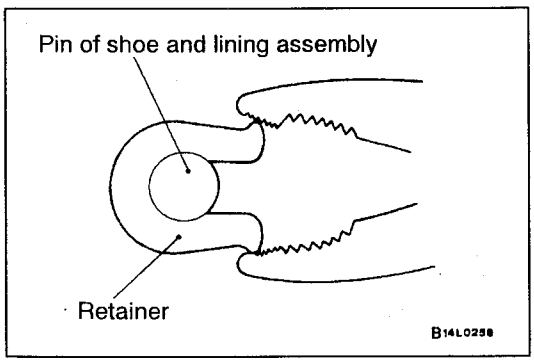

▶B◀ RETAINER INSTALLATION

Use pliers or the like to crimp the retainer or the pin positively.

INSPECTION

BRAKE LINING THICKNESS CHECK

Refer to P.35A-15.

BRAKE DRUM INSIDE DIAMETER CHECK

Refer to P.35A-15.

BRAKE LINING AND BRAKE DRUM CONTACT CHECK

Refer to P.35A-15.

WHEEL CYLINDER
DISASSEMBLY AND REASSEMBLY

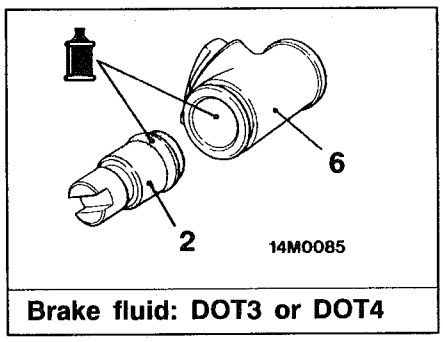

Brake fluid: DOT3 or DOT4

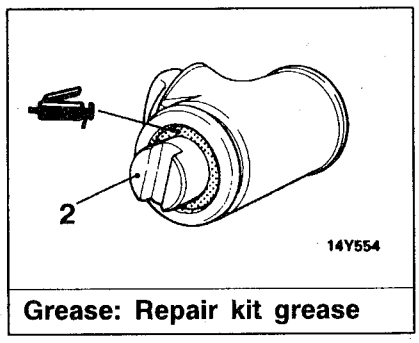

Grease: Repair kit grease

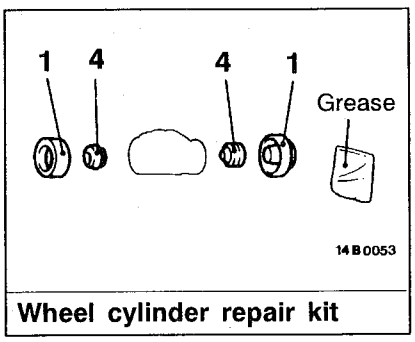

Wheel cylinder repair kit

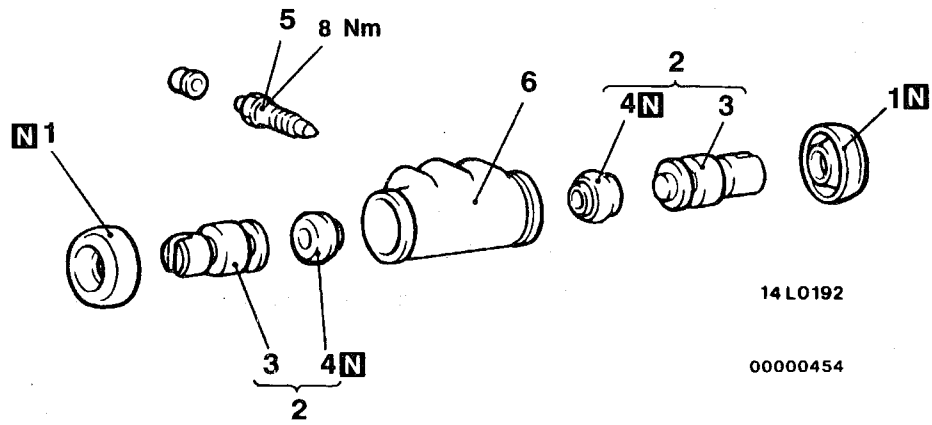

Disassembly steps

1. Boots
2. Piston assembly
- ▶A◀ 3. Pistons
- ▶A◀ 4. Piston cups
5. Spring
6. Wheel cylinder body

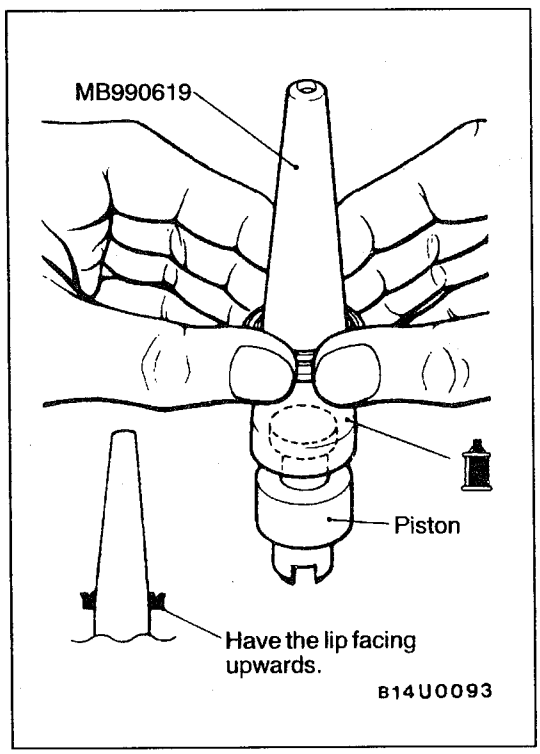

REASSEMBLY SERVICE POINT

▶A◀ PISTON CUPS/PISTONS REASSEMBLY

1. Use trichloroethylene, alcohol or the specified brake fluid to clean the piston.

   Specified brake fluid: DOT3 or DOT4
2. Apply the specified brake fluid to the piston cups and the outer circumference of the special tool.
3. Set the piston cup on the special tool with the lip of the cup facing up, fit the cup onto the special tool.
4. Slide the piston cup down the outside of the tool into the piston groove carefully, making sure that the piston cup is twisted or slanted.

INSPECTION

Check the piston and wheel cylinder walls for rust or damage, and if there is any abnormality, replace the entire wheel cylinder assembly.

PROPORTIONING VALVE <VEHICLES FOR HONG KONG>

REMOVAL AND INSTALLATION

Pre-removal Operation
Brake Fluid Draining

Post-installation Operation
- Brake Fluid Supplying
- Brake Line Bleeding (Refer to P.35A-11.)

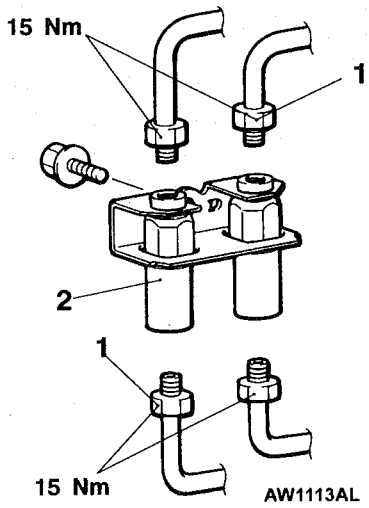

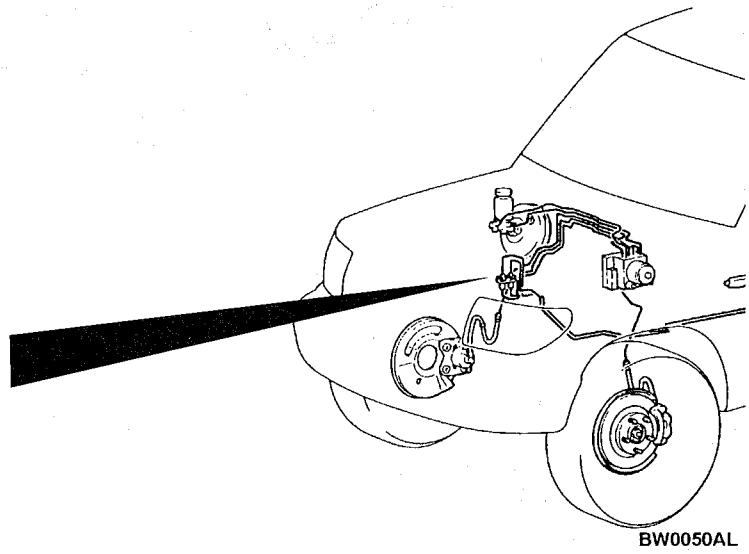

Removal steps

1. Brake pipe connection
2. Proportioning valve assembly

LOAD SENSING PROPORTIONING VALVE <VEHICLES EXCEPT FOR HONG KONG>

REMOVAL AND INSTALLATION

Caution
Do not disassemble the load sensing proportioning valve.

Pre-removal Operation	Post-installation Operation
Brake Fluid Draining	• Brake Fluid Supplying • Brake Line Bleeding (Refer to P.35A-11.)

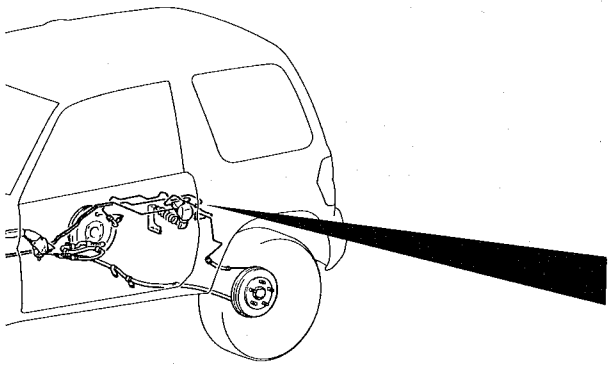
BW1078AL

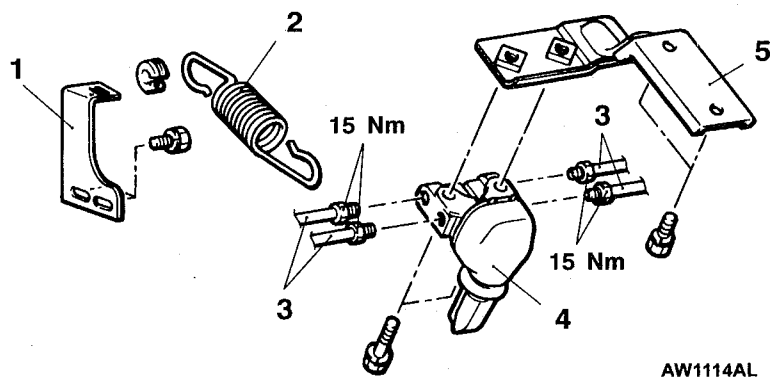

AW1114AL

Removal steps

▶A◀ 1. Spring support
2. Load sensing spring
3. Brake pipe connection
4. Load sensing proportioning valve
5. Bracket

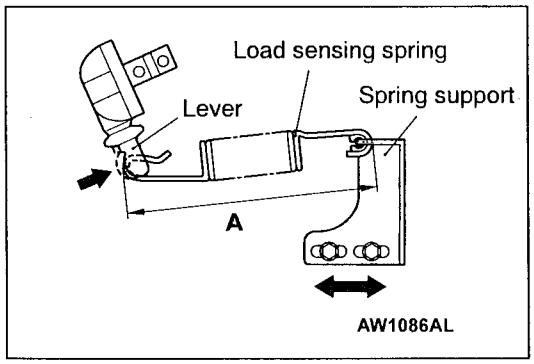

AW1086AL

INSTALLATION SERVICE POINT

▶A◀ SPRING SUPPORT INSTALLATION

1. Install the load sensing spring, and then tighten the spring support to the axle assembly temporarily.
2. Insert the lever of the load sensing proportioning valve fully into the valve side and hold it. Then adjust the spring support so that the spring length (the distance between the two ends of the spring) is at the standard value.

Standard value (A): 194 – 198 mm